MTSB-48NA

48" x 48" x 6" (exterior bottom of base)
TRADITIONAL THRESHOLD textured floor
Offset Drain
Acrylic CXL®
75 lbs / 34 kg

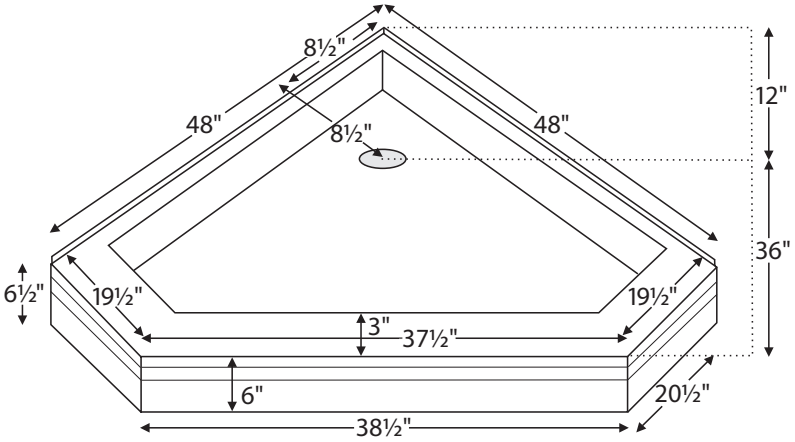

Model #	Size	Shape	MSRP
SB48NA	48" x 48" x 6"	Neo-Angle	**$1,675**

Options *Must be ordered at time of purchase*

Color Please specify color on order
White (CWH)
Biscuit (CBS)

Quick Ship (QSPRI) **$430**
Reduces lead time. Please call for availability.

Radiance® (RAD100) **$1,595** Shower floor heating system.
Radiance heating grids are fully integrated within the acrylic shell structure of the shower floor. Requires a 110-volt, 15 amp GFCI and remote installation of control box & keypad.

Pre-Leveled Foam Base (PLFSB) **$220**

PVC Drain Kit Finishes Chrome included with shower base
Brushed Nickel upcharge (SBDKBN) **$65**

Accessories

Drain Kit Options
Solid Brass Drain Kit with Stainless Steel Cover (SBDKSB) **$195**

Teak Shower Seat
Premium
Natural Stainless (TK-SSEAT2416BNS) **$3,035**
High-Polished Stainless (TK-SSEAT2416BHP) **$3,465**
Standard
Natural Stainless (TK-SSEAT2215NS) **$1,125**
High-Polished Stainless (TK-SSEAT2215HP) **$1,575**

Teak Bath Mat (TKMAT3018) **$815** Measures 30" x 17.5" x 1"
Custom sizes also available. Contact MTI for details.

Teak Shower Tray (TK48NA) **Contact MTI for pricing**

IMPORTANT ORDERING & INSTALLATION INFORMATION

- 2-sided integral tile flange to facilitate installation.
- Single threshold design.
- 3.5” drain opening pre-drilled.
- Drain finish options on this sheet are upcharge prices only. Contact MTI for ordering details for drain kits sold seprately.
- Compliant with ASTM C 1028-07 coefficient of friction test.
- Add proper wet-bedding compound to fully support bottom of shower base. Optional factory installed Pre-Leveled Foam Base negates the need to wet bed when installing on a flat, level subfloor. See installation instructions.

- Options and accessories may be packaged inside the box. Always check packaging before discarding.
- All product measurements are ±1/2”.
- Specifications and configurations are subject to change without notice.
- Measurements herein supersede all others published prior to publication date below.

See the Installation & Operation Manual for more details.
MTI’s Customer Service: Monday-Friday 8am-6pm EST
800-783-8827 or service@mtibaths.com

CSA # MTSB- 48NA

©2023 by MTI Baths, Inc. Modification Rights Reserved